Drag Flight/Scraper Conveyors

By Jorgensen Conveyors, Inc.

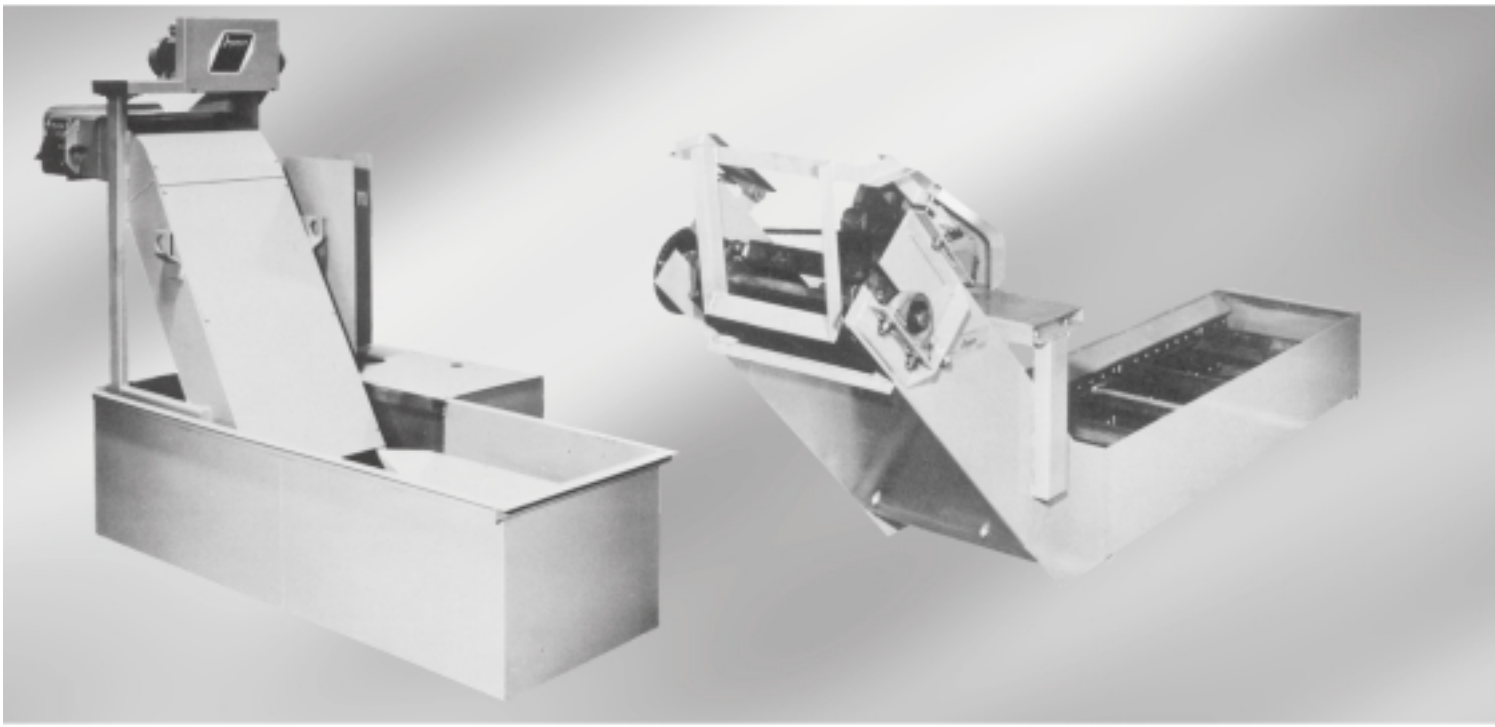

Drag Flight/Scraper Conveyor Systems

Jorgensen CONVEYORS, INC.
10303 North Baehr Road • Mequon, WI 53092 • Toll-Free: 1.800.325.7705 • www.jorgensenconveyors.com

Drag Flight/Scraper Conveyors

By Jorgensen Conveyors, Inc.

Applications

The Drag Flight/Scraper conveyor effectively handles materials of sludge or paste consistency when cutting steel, cast iron, aluminum or brass. Also handles fine particles usually with large amounts of coolant present.

Custom Fabricated

Drag Flight/Scraper conveyors are engineered to meet customer specifications. Conveyors can be fabricated with coolant reservoirs for machine tool applications where cutting oil and coolant is involved; with tank configuration per requirements. Jorgensen custom fabrication includes conveyor configuration, leg length, incline angle, chain design and width, drive system components and optional safety equipment.

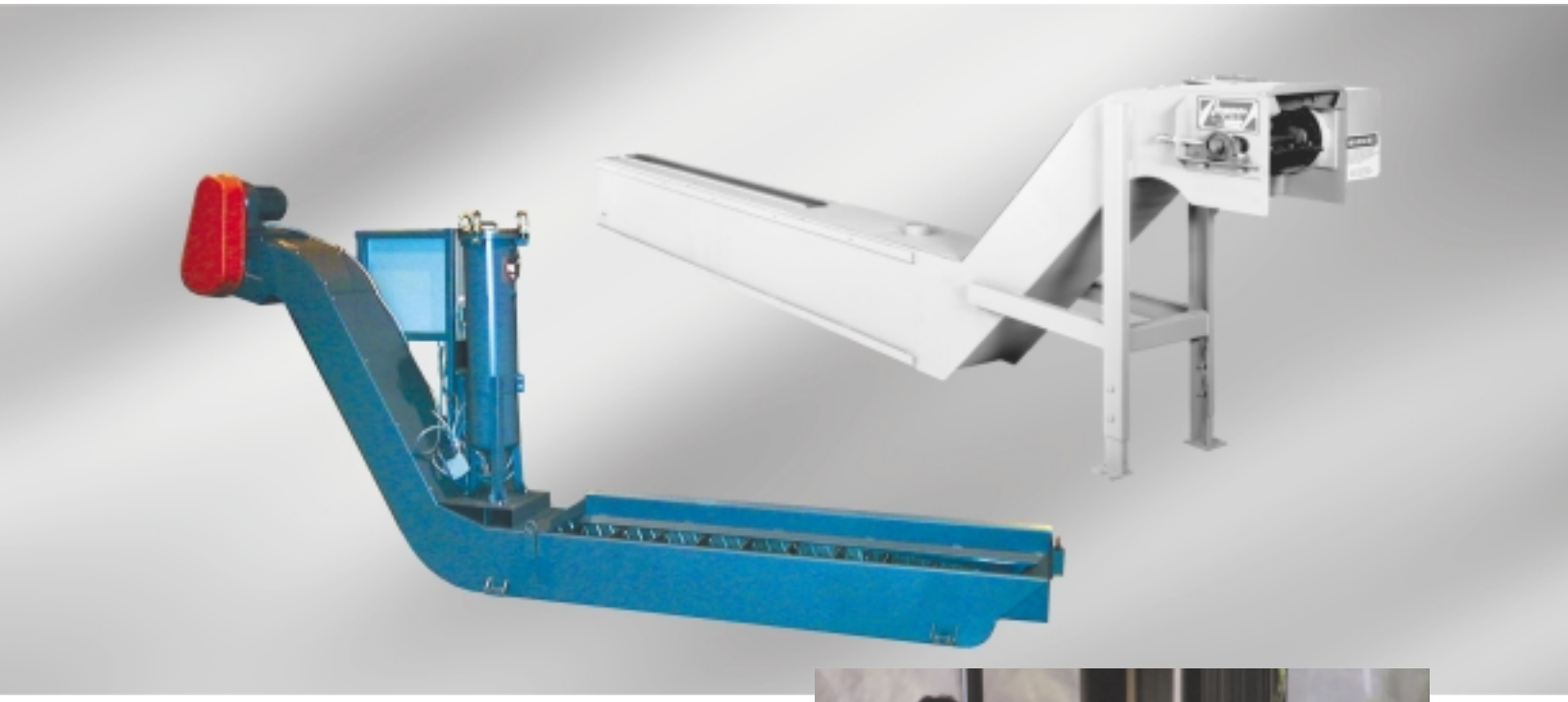

Features and Benefits

- Effective sluge or paste material removal.
- Broken/Fine chip removal.
- Effective settling system.
- Convertible to hinged steel belt conveyor.
- Large pitch chains are available for demanding applications.
- Heavy duty steel components are made from a variety of gauges and plate thicknesses for durability.
- Completely detachable chain design for ease of maintenance, pioneered by Jorgensen.

Computer programs for routine engineering calculations - we take a disciplined approach in looking at each application to determine the proper sizing of the conveyors and their drives to assure long-term reliability and functionality.

Conveyor Configuration Types

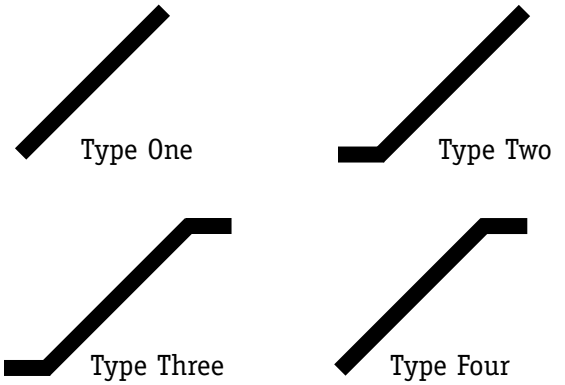

System Options

- High pressure coolant system
- Pumps/plumbing/coolant transfer
- Downstream filtration
- Tramp oil skimmers
- Coolant chillers/heat exchangers
- Complete electrics/controls
- Air knife

Drag Flight /Scraper Application Chart

Material Type*	Steel	Cast Iron	Aluminum	Brass
Chip Type				
Bushy & Tight *(Birds Nest)*	▼	—	▼	▼
Bushy & Loose	▼	—	▼	▼
Broken Chips *(6's & 9's)*	▼	▼	▼	▼
Fine Chips *(Free Flow Granular)*	▼	▼	▼	▼
Swarf Sludge	▼	▼	▼	▼

▼ Recommended Application ▼ Used In Some Applications ▼ Not Recommended

* For other materials please contact a Jorgensen proposal engineer.

What Customers are Saying

"Jorgensen is easy to work with. We have an excellent working relationship. They are very willing to send out service people and engineers. Their attitude is "let's get it fixed!" Their flexibility and size gives us the personal benefit of working one on one with engineers or sales managers to get the job done. Jorgensen's conveyor consignment program is outstanding and helps Cincinnati Machine tremendously. It's a true example of an ongoing partnership between an OEM and a vendor."

Jim Spearman
Cincinnati Lamb

Prompt Delivery

Jorgensen's customer focus means we do everything possible to meet your delivery requirement. Lean capabilities enable Jorgensen to produce in lot sizes of one, assuring minimal cycle times and prompt delivery without the necessity to maintain finished goods inventory.

Drag Flight/Scraper Conveyors

By Jorgensen Conveyors, Inc.

Engineering Specifications

1.5 Inch Pitch Drag Flight/Scraper Conveyor

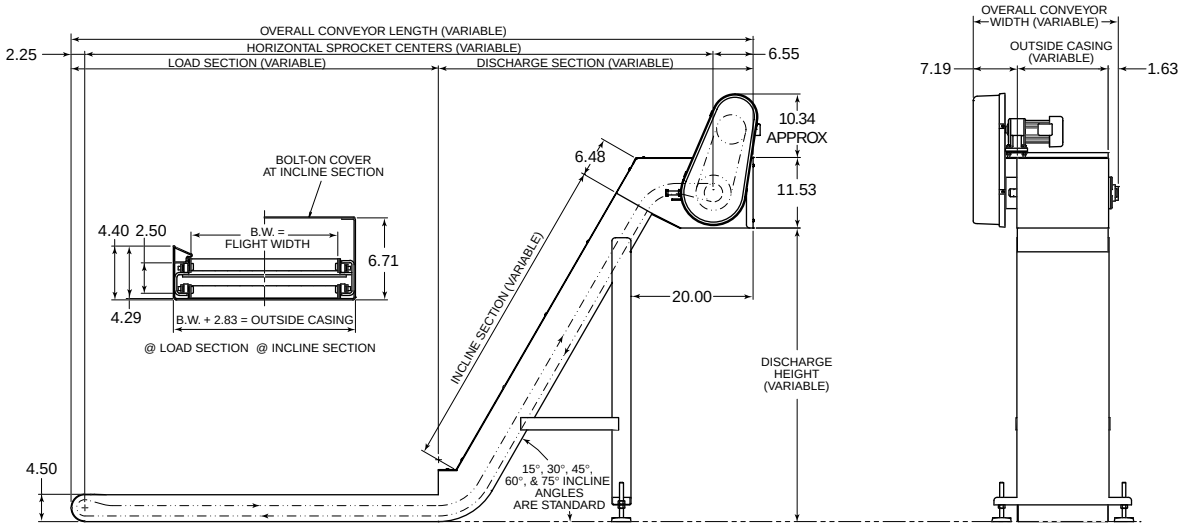

2.5 Inch Pitch Drag Flight/Scraper Conveyor

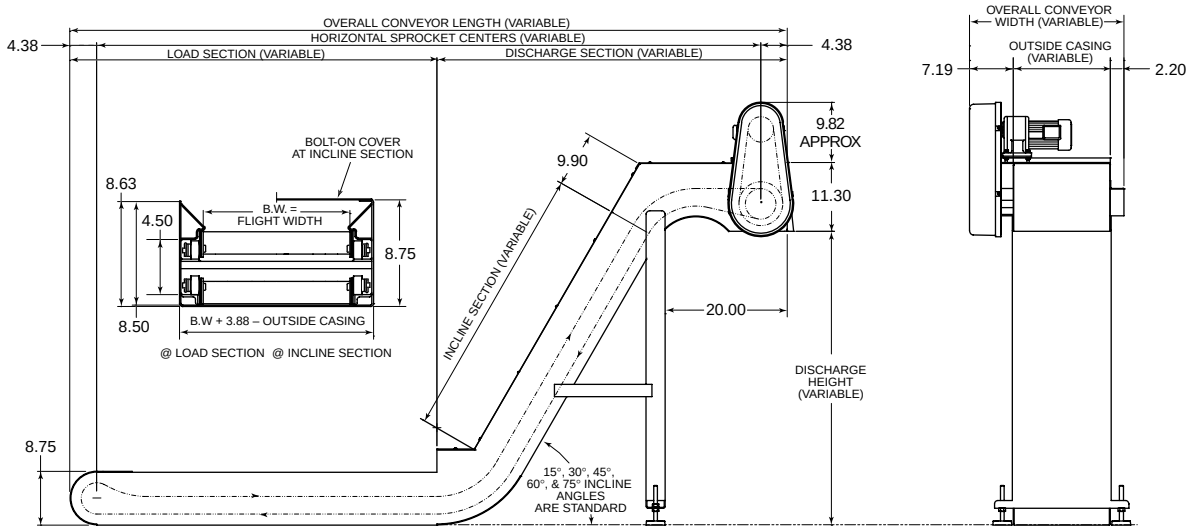

Main Office and Manufacturing
10303 North Baehr Road • Mequon, WI 53092 • Toll-Free: 1.800.325.7705

Manufacturing Affiliates

United Kingdom
Midland Sheetmetal - Leeside, Merry Lees Industrial Estate,
Merry Lees, Desford, Leicestershire, LE9 9FE, England
Toll-Free outside the U.S.A.: 002.1.800.325.7705

Czech Republic
Breznice areal ZAKO • c.p. 363, 364 760 01 Zlin, • Czech Republic
Toll-Free outside the U.S.A.: 002.1.800.325.7705

Website: **www.jorgensenconveyors.com**
E-mail: **info@jorgensenconveyors.com**

ISO 9001 Certified

04-06